AV-30-C

Installation Manual

© 2020 - 2021 uAvionix Corporation. All rights reserved.

Except as expressly provided herein, no part of this guide may be reproduced, transmitted, disseminated, downloaded or stored in any storage medium, for any purpose without the express written permission of uAvionix. uAvionix grants permissions to download a single copy of this guide onto an electronic storage medium to be viewed for personal use, provided that the complete text of this copyright notice is retained. Unauthorized commercial distribution of this manual or any revision hereto is strictly prohibited.

uAvionix® and Ping® are registered trademarks of uAvionix Corporation and may not be used without express permission of uAvionix.

AV-30, AV-30-E, and AV-30-C are trademarks of uAvionix Corporation and may not be used without express permission of uAvionix.

Patent uavionix.com/patents

1 Revision History

Revision	Date	Comments
A	4/24/2020	Initial release
B	7/13/2020	Added installation log-book entry requirement. Added method to determine proper screw length. Highlighted primary functions. Added items included in the ICA. Added startup time and AoA reference per MOPS requirement. Added reference to CFR 23.1321.
C	8/10/2020	Added reference to AoA operation in inverted flight and operation in excess of G limits. Added reference to utilize wire type in accordance with AC 43.13-1B.
D	6/3/2021	Updated Top Level Assembly references.

2 Warnings / Disclaimers

All device operational procedures must be learned on the ground.

uAvionix is not liable for damages arising from the use or misuse of this product.

This equipment is classified by the United States Department of Commerce's Bureau of Industry and Security (BIS) as Export Control Classification Number (ECCN) 7A994.

These items are controlled by the U.S. Government and authorized for export only to the country of ultimate destination for use by the ultimate consignee or end-user(s) herein identified. They may not be resold, transferred, or otherwise disposed of, to any other country or to any person other than the authorized ultimate consignee or end-user(s), either in their original form or after being incorporated into other items, without first obtaining approval from the U.S. government or as otherwise authorized by U.S. law and regulations.

3 Table of Contents

1 Revision History 3
2 Warnings / Disclaimers 4
3 Table of Contents 5
4 AV-30-C System Information 7
4.1 System Description 7
4.2 System Functions 9
4.3 System Specifications 10
5 Certification 11
5.1 Mechanical Instrument Replacement 12
5.2 Non-Required Instrument Addition 12
5.3 Vacuum System Removal 12
5.4 Applicable Performance Standards 13
6 Installation Limitations 14
6.1 Installation Approval Limitations 14
7 Installation Locations & Operating Modes 15
7.1 Installation Locations 15
7.2 Operating Mode Configuration 16
8 Functionality and Required Interfaces 17
8.1 Aircraft Systems Connections 17
8.2 Feature Matrix 18
8.2.1 Power Input (Required) 19
8.2.2 Pitot and Static Interfaces (Required/Optional) 19
8.2.3 Outside Air Temp Input (Optional) 19
8.2.4 Audio Output (Optional) 20
8.2.5 GPS Interface (Optional) 20
8.3 Internal Battery Operation 21
8.3.1 General 21
9 Equipment Installation 22
9.1 Overview 22
9.2 Supplied Components 22
9.3 Non-Supplied Components 22
9.4 Installation Records 22
9.5 Mechanical Drawing 23
9.6 Mounting Screw Length Restriction 24
9.7 Wiring Diagrams 25
9.8 Bonding Requirements 27

9.9 Unit Pinout 28
10 Setup & Configuration 29
10.1 Startup and Common Controls 29
10.2 Available Menus 30
10.3 Install Menu Activation 31
10.4 Install Menu Settings 32
10.5 Mandatory Settings 33
10.5.1 Unit Function 33
10.5.2 Function Lock 33
10.5.3 Trims 33
10.5.4 V-Speeds 33
10.5.5 Display Units 33
10.5.6 Serial Inputs 34
10.5.7 Demo Mode 34
10.6 System Checkout 34
10.6.1 Alignment 34
10.6.2 OAT Interface 35
10.6.3 GPS Navigator Interface 35
10.6.4 EMC Checkout 36
11 Troubleshooting 38
12 Instructions for Continued Maintenance & Operation 39
13 Aircraft Flight Manual Supplements 39
14 Serial Interface Specification 40
15 Field Update Capability 41

4 AV-30-C System Information

4.1 System Description

The uAvionix AV-30-C is a fully digital multi-mode instrument that mounts in the legacy 3 1/8” round instrument panel. It can be field configured as either an Attitude Indicator (AI) or a Directional Gyro (DG) indicator. It is fully self-contained with dual-precision inertial and pressure sensors and allows for a wide variety of pilot customization.

Figure 1 - AV-30-C Multi Mode AI/DG – Basic Display

When configured as an AI, primary attitude and slip are always displayed. The un-used portions of the display area can be customized by the pilot to show a variety of textual and graphical data-overlay fields. Three pages may be customized by the pilot while a fourth page presents a fully decluttered view of only attitude and slip.

When configured as a Directional Gyro (DG), direction of flight information is presented. The flight direction can be configured to be presented as non-slaved heading or inertially stabilized GPS track when connected to an external GPS navigator. Multiple display presentations, including compass rose, GPS HSI, and GPS Arc views can be selected by the pilot. The un-used portions of the display area can similarly be configured for a variety of textual data-overlays.

In both operating modes, the pilot may select from multiple visual styles which are intended to improve visual compatibility with legacy aircraft instrumentation and preserve the look-and-feel of older aircraft applications.

A wide variety of supplemental functions, including audio alerting, derived angle of attack presentation, g-load display, and more are provided. An internal, rechargeable LiPo battery allows for operation for a nominal 2 hours in the event of aircraft power loss and 30 minutes minimum under all temperature conditions.

See *UAV-1003946-001, AV-30-C, Pilot's Guide* for detailed functionality.

4.2 System Functions

Primary Functions:

- Primary Attitude (AI Mode)
- Primary Slip (AI Mode)
- Primary Direction of Flight Indication (DG Mode)

Supplemental Functions:

- Indicated Airspeed
- Altitude
- V-Speeds
- Angle Of Attack
- Vertical Trend
- Vertical Speed
- Set Altitude
- Heading
- Bus Voltage
- G Load
- Outside Air Temp
- True Airspeed
- Density Altitude
- GPS Navigator / Waypoint Data
- GPS Navigator Nav Data
- GPS Navigator Route Line
- Heading Bug

Audio and Visual Alerting Functions:

- AoA Alerting
- G Limit Alerting
- Excessive Roll Alerting

Misc. Functions:

- Internal Battery Operation
- Auto / Manual Brightness

4.3 System Specifications

Electrical Attributes	
Input Voltage Nominal	+10 to +32 VDC
Input Voltage Max	+60 VDC
Input Power Nominal	6 Watts (0.5 Amps @ 12VDC)
Input Power Max	12 Watts (1.0 Amps @ 12VDC)
Required Circuit Breaker	2 Amp
Operation on Battery	2 Hrs Typ @ 20°C / 30 Min Minimum @ -20C
Physical Attributes	
Mounting Configuration	3 1/8” Round Instrument Hole
Dimensions wo/Connector	3.38 x 3.38 x 1.6 Inches
Weight	0.56 Lbs.
Electrical Connector	15 Pin Male D-Sub
Pneumatic Connectors	¼” OD Quick Connect
Mounting	(4X) #6-32 Machine Screws
Case Material	Billet Aluminum
Environmental	
Ground Survival Low	-55°C
Operating Low	-20°C
Ground Survival High	+85°C
Operating High	+55°C
Startup Time	< 3 Minutes
Altitude	25,000 Feet Max
Optical Characteristics	
Diagonal Size	3” Circular
Contrast Ratio (Typical)	500
Brightness (Typical)	1000 cd/m^2
Viewing Angle Left/Right	60°
Viewing Angle Up	45°
Viewing Angle Down	10°
Backlight Lifetime (Typical)	50,000 Hrs

Table 1 - System Specifications

5 Certification

This installation manual provides mechanical and electrical information necessary to install the AV-30-C. The content of this manual assumes use by competent and qualified personnel using standard maintenance procedures in accordance with Title 14 of the Code of Federal Regulation (CFR) and other related accepted procedures.

The certification basis for the AV-30-C is 14 CFR Part 23, Amendment 23-61. Installation is approved as a Level A system and is robust to High Intensity Radiated Field (HIRF) and lightning levels applicable for both metallic and non-metallic aircraft.

The AV-30-C is approved for primary Attitude, Slip and Direction of Flight.

All other functionality is supplemental in nature and may not satisfy regulatory requirements for required instrumentation.

The installer must ensure that all installation limitations as defined in this document are observed.

The internal battery capacity has been tested and verified to provide 30 minutes of operational capacity (with reserve), and meets the requirements defined in CFR 23.1311(a)(5) and 23.1353(h), allowing independent operation from the primary electrical power system.

See *Section 8.3 Internal Battery Operation* for additional battery operational characteristics.

For aircraft capable of acrobatic flight, the AoA indication may become unreliable for operation in inverted flight and maneuvers exceeding ±8 G.

5.1 Mechanical Instrument Replacement

Approval is granted to replace legacy mechanical instrumentation as follows:

- Installation of the AV-30-C (Dedicated AI mode) as the primary source for attitude and slip. Installation replaces the existing stand-alone vacuum or electrically powered attitude indicator.

- Installation of the AV-30-C (Dedicated DG mode) as the primary source for direction-of-flight. Installation replaces the existing stand-alone vacuum or electrically powered non-slaved directional gyro indicator.

Note that when installed as a DG, a reversionary AI is available for display. This functionality is supplemental only and does not satisfy requirements for a backup or standby attitude, turn and slip, or turn coordinator.

5.2 Non-Required Instrument Addition

Approval is granted to install the AV-30-C as a non-required instrument, augmenting existing required instrumentation. In this configuration, the AV-30-C must not replace an existing required instrument.

5.3 Vacuum System Removal

The aircraft's vacuum system typically may be removed under a field approval process (FAA form 337) if no other systems or equipment requires it. The AV-30-C installation approval does not address this alteration.

5.4 Applicable Performance Standards

The AV-30-C was designed to, and satisfied the applicable performance requirements defined in the following design standards:

MOPS	Title	Category
SAE AS8019	Airspeed Instruments	Type B
SAE AS392C	Altimeter, Pressure Actuated, Sensitive Type	Type I
SAE AS8005A	Standard Temperature Instruments	Class IIIc
SAE AS8034	Airborne Multipurpose Electronic Displays	N/A
RTCA DO-334	Attitude and Heading Reference Systems (AHRS)	A5 H9 T7
ASTM F3011-13	Angle Of Attack System	N/A
RTCA DO-347	Cert and Test for Small and Med Lipo Batteries	Medium Size

Table 2 - Applicable Performance Standards

6 Installation Limitations

The following section provides the FAA approved installation limitations.

6.1 Installation Approval Limitations

This article meets the minimum performance and quality control standards required by an Approved Model List - Supplemental Type Certificate (AML-STC) and when installed on aircraft approved on the AML can be approved for return to service after installation.

If installation for an aircraft that is not listed on the AML, separate approval must be obtained. The following installation limitations apply:

- **Installation is restricted to CFR Part 23, Class I and II, single engine aircraft only (gross take-off weight of no more than 6000 lbs, 6 seats or less, including pilot/copilot).**
- **Installation is restricted to aircraft with a 25,000-foot maximum (or less) ceiling limitation.**
- **Installation is restricted to aircraft with equal to or less than 300 knot Vne airspeed.**
- **Installation may not be performed as part of an integrated autopilot system including heading bug interface, attitude source or flight director display.**
- **Installation may not be performed as a replacement of a Horizontal Situational Awareness Indicator (HSI).**
- **In installations where the primary attitude indicator is being replaced, the existing airspeed and altimeter must remain in their factory locations.**
- **An electrical load analysis must be performed in association with the installation.**
- **Connection to the Audio interface is not allowed for IFR approved non-metallic aircraft due to indirect lightning protection limitations.**
- **A Wet compass must be installed in the aircraft.**

7 Installation Locations & Operating Modes

7.1 Installation Locations

The following figure shows a typical “six-pack” and one possible arrangement of instrument locations:

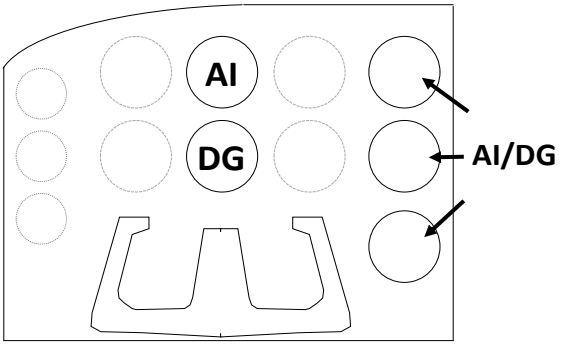

Figure 2 – Mechanical Gauge Replacement

Note that the physical arrangement in many aircraft varies from the traditional “T” configuration shown above. The AI/DG locations are examples of installation locations as a non-required instrument.

The existing mechanically based altimeter and airspeed indicator must remain in their factory locations for this installation configuration.

Installation as a pilot configurable AI/DG may not replace a primary instrument.

The replaced instruments may NOT be part of an autopilot or primary navigational display, such as an integrated autopilot system, autopilot heading bug source, attitude source, CDI, HSI or flight director display.

Reference CFR 23.1321 Arrangement and Visibility for additional FAA guidance on instrument installation location.

7.2 Operating Mode Configuration

The AV-30-C operating mode is configured during installation and can be set as follows:

- Unit locked as a dedicated Attitude Indicator (AI Mode)
- Unit locked as a dedicated Direction Indicator (DG Mode)
- Unit can be toggled between AI and DG mode by the pilot

Installations where dedicated functionality is required must have the associated setting configured in the setup procedures. <u>This setting is mandatory</u> and non-pilot accessible.

If the functionality is not locked, pressing and holding the rotary knob will toggle between AI and DG mode. This mode is only applicable for installation as a non-required instrument.

☛ An AV-30-C that replaces the Attitude Indicator must have the operating mode locked as an AI.

☛ An AV-30-C that replaces that Directional Gyro must have the operating mode locked as a DG.

☛ An AV-30-C installed as a non-required indicator may be configured in any operating mode based on pilot preference.

Replaced instruments may NOT be part of an autopilot system such as the rate-of-turn source for an autopilot or display of flight director information from an autopilot.

8 Functionality and Required Interfaces

8.1 Aircraft Systems Connections

All aircraft systems connections are provided on the single 15-Pin D-sub connector and two quick-connect pneumatic fittings. Various interfaces are optional as indicated in the following diagrams.

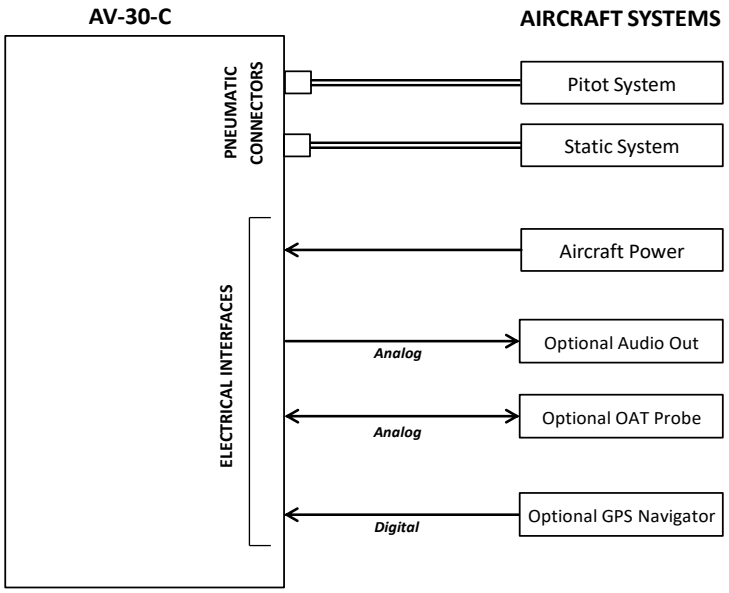

Figure 3 – AV-30-C Aircraft Systems Interfaces – AI Mode

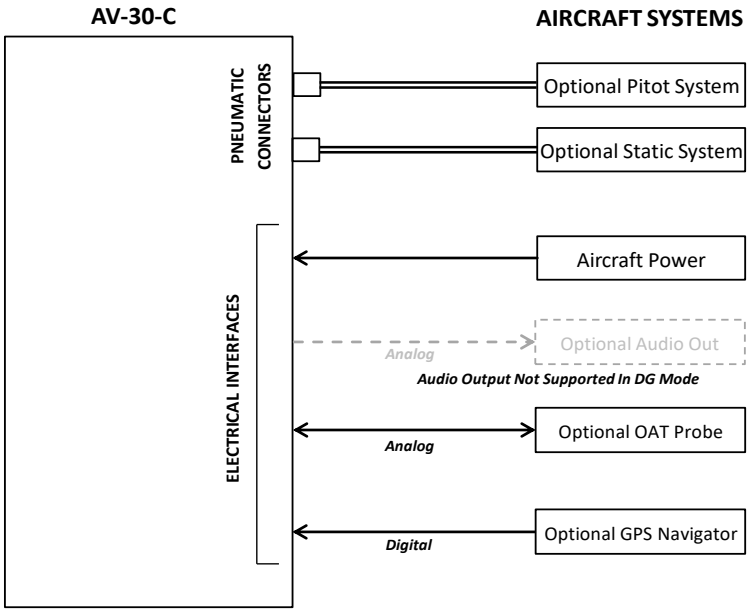

Figure 4 – AV-30-C Aircraft Systems Interfaces – DG Mode

8.2 Feature Matrix

The following matrix shows primary and supplemental data and any required external interface.

Feature	AI Mode	DG Mode	Required Interface
Primary Attitude and Slip			
Primary Attitude	✓	×	None
Primary Slip	✓	×	None
Reversionary Attitude / Slip	×	✓	None
Primary Direction of Flight Indication			
Direction Tape (DG / GPS)	✓	×	None / GPS Navigator
Direction Rose (DG)	×	✓	None
Direction Arc (GPS)	×	✓	GPS Navigator
Direction HSI (GPS)	×	✓	GPS Navigator
Supplemental Data Overlays – Pilot Configurable (Textual or Graphical)			
Indicated Airspeed (Textual)	✓	×	Pitot / Static
V-Speeds (Graphical)	✓	×	Pitot / Static
Baro Altitude (Textual)	✓	×	Pitot / Static
Angle Of Attack (Graphical)	✓	×	Pitot / Static
Vertical Trend (Graphical)	✓	×	Pitot / Static
Vertical Speed (Textual)	✓	×	Pitot / Static
Set Altitude (Textual)	✓	×	None
Heading (Textual)	✓	✓	None
Bus Voltage (Textual)	✓	✓	None
G Load (Textual)	✓	✓	None
Outside Air Temp (Textual)	✓	✓	OAT Probe
True Airspeed (Textual)	✓	✓	Pitot / Static / OAT Probe
Density Altitude (Textual)	✓	✓	Pitot / Static / OAT Probe
GPS Navigation / Waypoint Data			
Textual Nav Data	✓	✓	GPS Navigator
Graphical Nav Data	×	✓	GPS Navigator
Heading Bug			
Hdg Bug – Ref Only, no AP	✓	✓	None
Audio and Visual Alerting			
AoA Alerting	✓	×	Pitot / Static
G Limit Alerting	✓	×	None
Excessive Roll Alerting	✓	×	None
Misc.			
Internal Battery Operation	✓	✓	Pitot / Static
Auto / Manual Brightness	✓	✓	None

Table 3 – Feature Matrix

8.2.1 Power Input (Required)

Power input is required and connects to the aircraft's power bus. Input range is compatible with both 12V and 24V aircraft. Internally, this power is diode OR'ed with the internal battery via a processor-controlled switch. This architecture allows the unit to continue operation if external power fluctuates or is completely lost.

Each AV-30-C must have a dedicated, properly labeled, pilot resettable circuit breaker as part of the installation. Power for the unit may be supplied from either the avionics bus or the main battery master relay.

8.2.2 Pitot and Static Interfaces (Required/Optional)

In addition to directly displayable data such as airspeed and altitude, pitot and static inputs are utilized within the probeless Angle of Attack algorithm and provide the underlying source for various air-data type data overlays (TAS & DALT).

When installed as a DG, pitot and static connections are not required unless TAS and DALT are desirable (also requires a dedicated OAT probe). See the detailed wiring diagram for more information.

8.2.3 Outside Air Temp Input (Optional)

The optional outside air temperature interface requires a dedicated external analog probe. This port connection is compatible with the Davtron P/N C307PS (not supplied).

This is a differential two-wire current source based on the Analog Devices AD590KH component and supplies a current that corresponds to the ambient temperature.

If two displays are connected to the same probe, the current will be split between the two and incorrect readings will be shown by both.

The sensor reading must be trimmed during the installation process to compensate for probe-to-probe variations.

The OAT probe is automatically detected by the system, and when detected, allows temperature related parameters to be selected for display by the pilot.

If the OAT probe is not detected, display of these parameters will automatically be inhibited.

8.2.4 Audio Output (Optional)

The optional audio panel connection is a low-voltage analog output that is designed to connect directly to an audio panel (typically a non-switched input). High power outputs capable of directly driving a cockpit speaker are not provided.

When installed as a DG, no audio alerting is supported, and this output should remain disconnected.

In non-metallic, IFR capable aircraft, this connection MUST remain disconnected due to lightning strike limitations.

8.2.5 GPS Interface (Optional)

The GPS interface is an optional RS-232 serial input that is compatible with the industry standard “Moving Map” output provided by most panel mounted GPS units, and NMEA serial interfaces provided by most hand-held GPS units.

This is a text/binary protocol output by the GPS navigator that contains situational awareness information such as ground speed, track, distance to destination, cross track, etc, and is typically utilized by remote mapping/display products to provide additional pilot awareness.

This output does not provide IFR compliant lateral or vertical guidance, therefore all deviation related data presented is for VFR operations only.

The AV-30-C does no computations or operations on the data obtained from the GPS navigator, and simply displays the received data in a textual or graphical format as configured by the pilot.

☛ This serial interface may be connected in parallel between multiple AV-30 units and is supported in both the AI and DG modes.

The supported protocols are contained in Section 14- Serial Interface Specification.

8.3 Internal Battery Operation

8.3.1 General

The internal battery consists of a rechargeable LiPo battery system with automatic recharge, self-test and power switching capability. The internal battery capacity will provide approximately 2 hours of operation at standard temperatures and 30 minutes (minimum) of operational capacity over the operational temperature range.

See the Internal Battery Operation section within the Pilots Guide for additional operational information.

9 Equipment Installation

9.1 Overview

Installation consists of the following steps:

- Remove / relocate any legacy instrumentation
- Add or locate an appropriate power source / breaker
- Wire power and systems interfaces as needed
- Mount the unit to the instrument panel with supplied screws
- Apply power and perform setup
- Perform system checkout procedures including EMC checks

9.2 Supplied Components

Component	Part Number	Description
AV-30-C Unit	UAV-1003429-001 or UAV-1003429-002	AV-30-C Unit
AV-30-C Installation Kit	UAV-1004091-001	Installation Kit
AV-30-C Operating Software	UAV-1003494-001	AV-30-C Operating Software v1.0.18

Table 4 – Supplied Components

9.3 Non-Supplied Components

Component	Description
Pitot / Static Tubing	Length as required
Pitot Static T's	Quantity as required
Circuit Breakers (2A)	One required for each instrument
Power and Interconnect Wire	See AC 43.13-1B Chapter 11, Section 7 for acceptable wire types
OAT Probe	Davtron P/N C307PS

Table 5 – Non-Supplied Components

9.4 Installation Records

The date of installation should be recorded in the aircraft's log-book.

Entry should include instrument(s) being replaced (AI or DG, or both), or if the installation is being performed as a non-required instrument.

Entry should also include a description of any optional connections made.

9.5 Mechanical Drawing

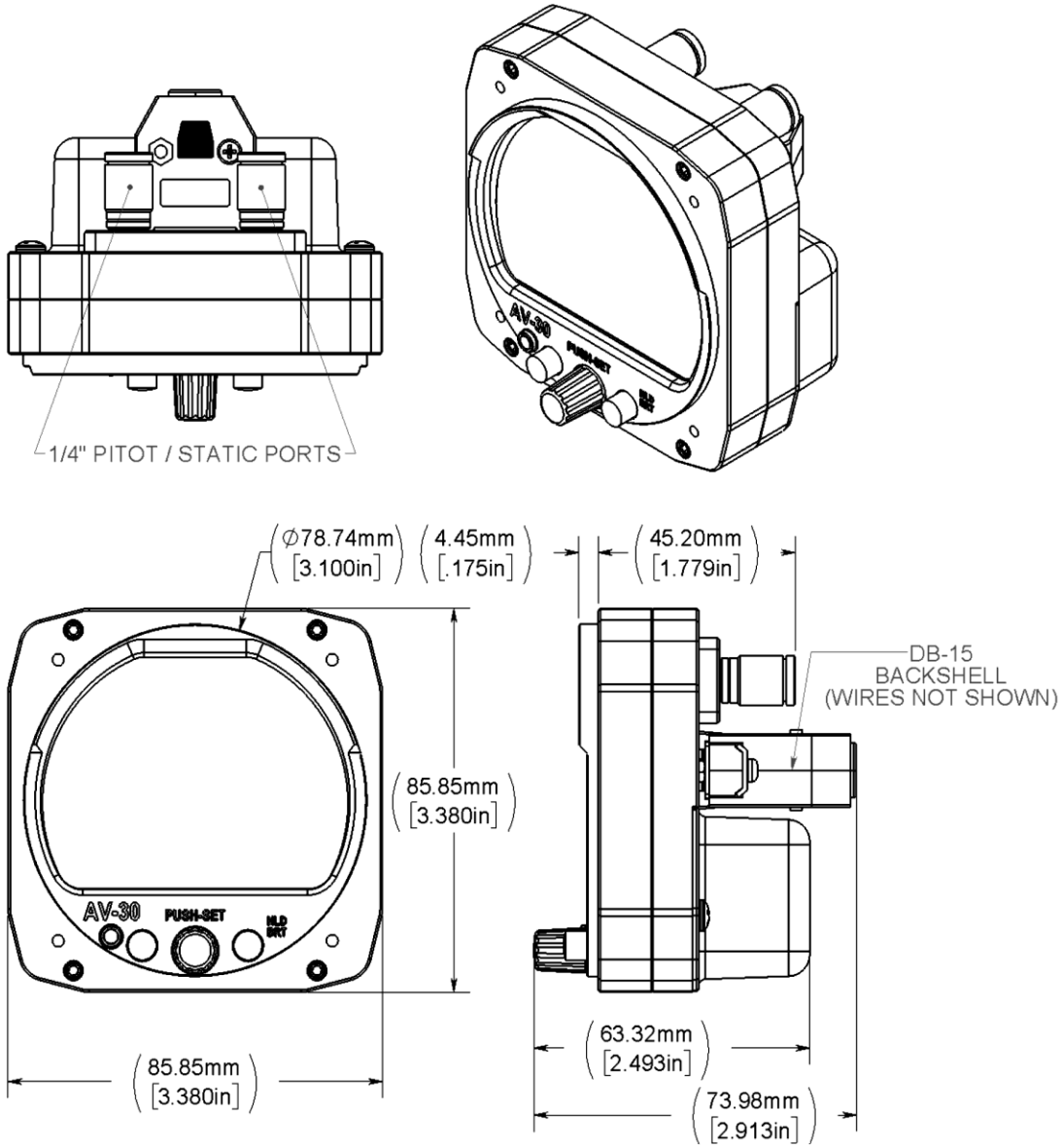

Figure 5 – Mechanical Drawing

9.6 Mounting Screw Length Restriction

The AV-30-C is fastened to the instrument panel with four 6-32 screws. The unit mounts from the rear of the instrument panel, with the screws being inserted from the front of the panel.

☛ The four 6-32 Mounting screws must observe depth limits given the internal component design.

☛ Torque screws to 6 (+/-1) Inch LBS.

The threaded hole in the AV-30-C bottoms out prior to the internal components. Installing a mounting screw that is longer than optimal <u>will not</u> damage the unit but will result in the unit not being fully fastened to the panel.

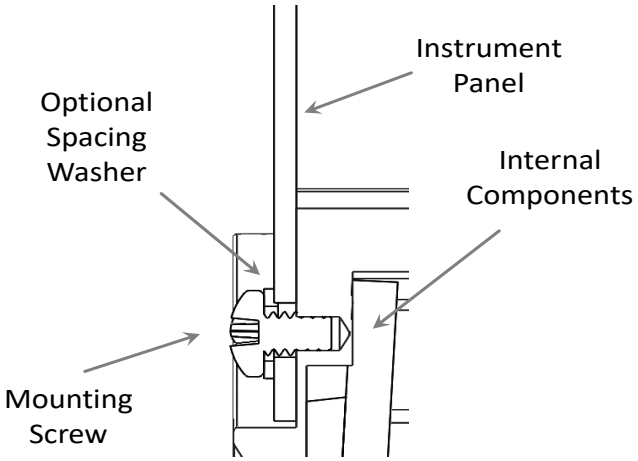

Figure 6 – Mounting Screw Dept Limits

The installation kit contains multiple length screws to assist in compensating for different instrument panel thicknesses.

Correct screw length may be determined by inserting the supplied screw in the instrument panel (without the AV-30-C Installed) and ensuring that either three or four full threads are exposed on the opposite side of the panel. Select alternate lengths as needed.

9.7 Wiring Diagrams

The AV-30-C performs different functions when installed as an AI or DG, and therefore wiring varies based on installation. The following diagrams show connections for each configuration.

The primary differences are that the DG does not require pitot or static connections (if the associated feature set is not desired), and audio alerting is not supported.

See AC 43.13-1B Chapter 11, Section 7 for acceptable wire types for both power and interconnect purposes.

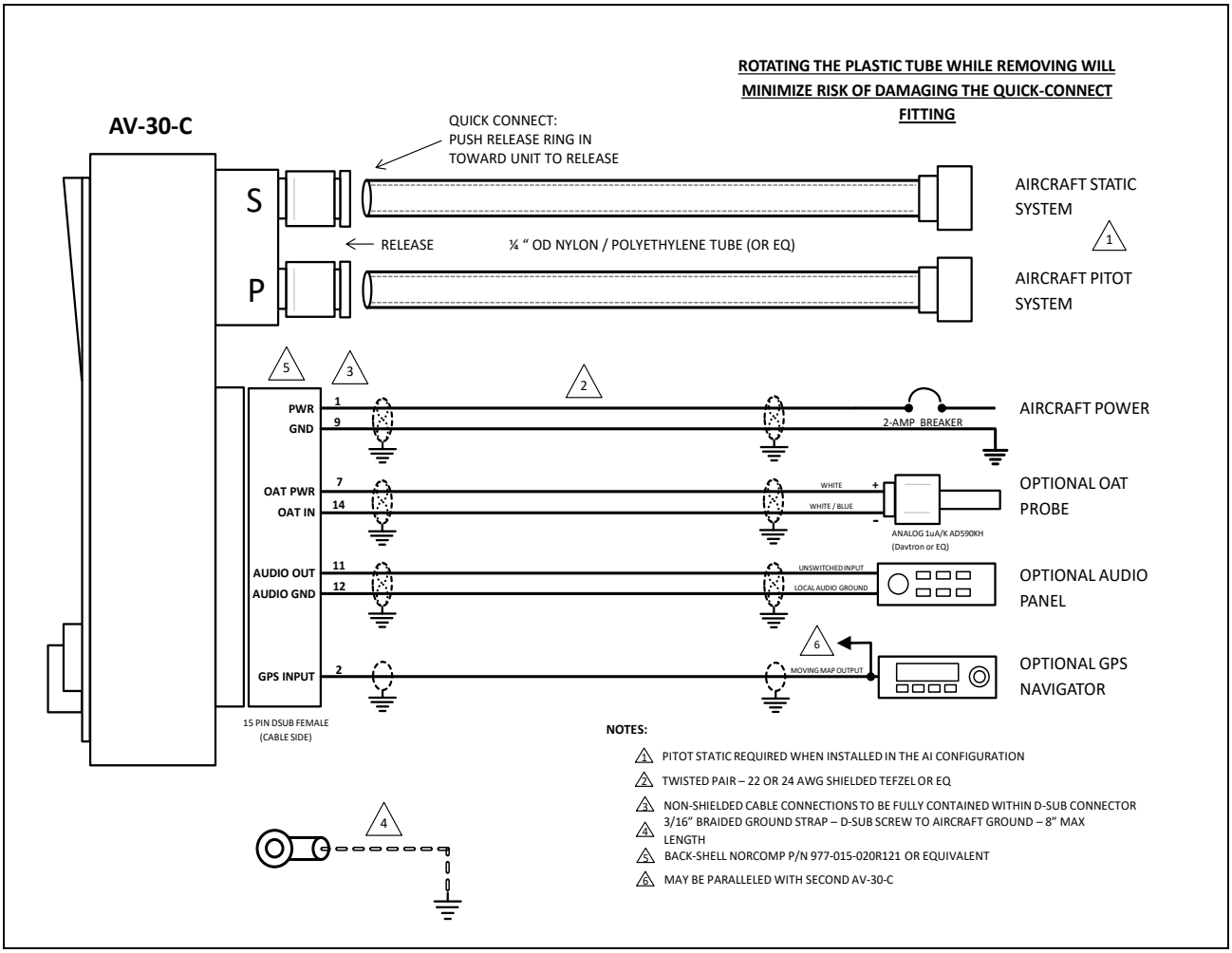

Figure 7 - Wiring Diagram – Attitude Indicator Position Installation

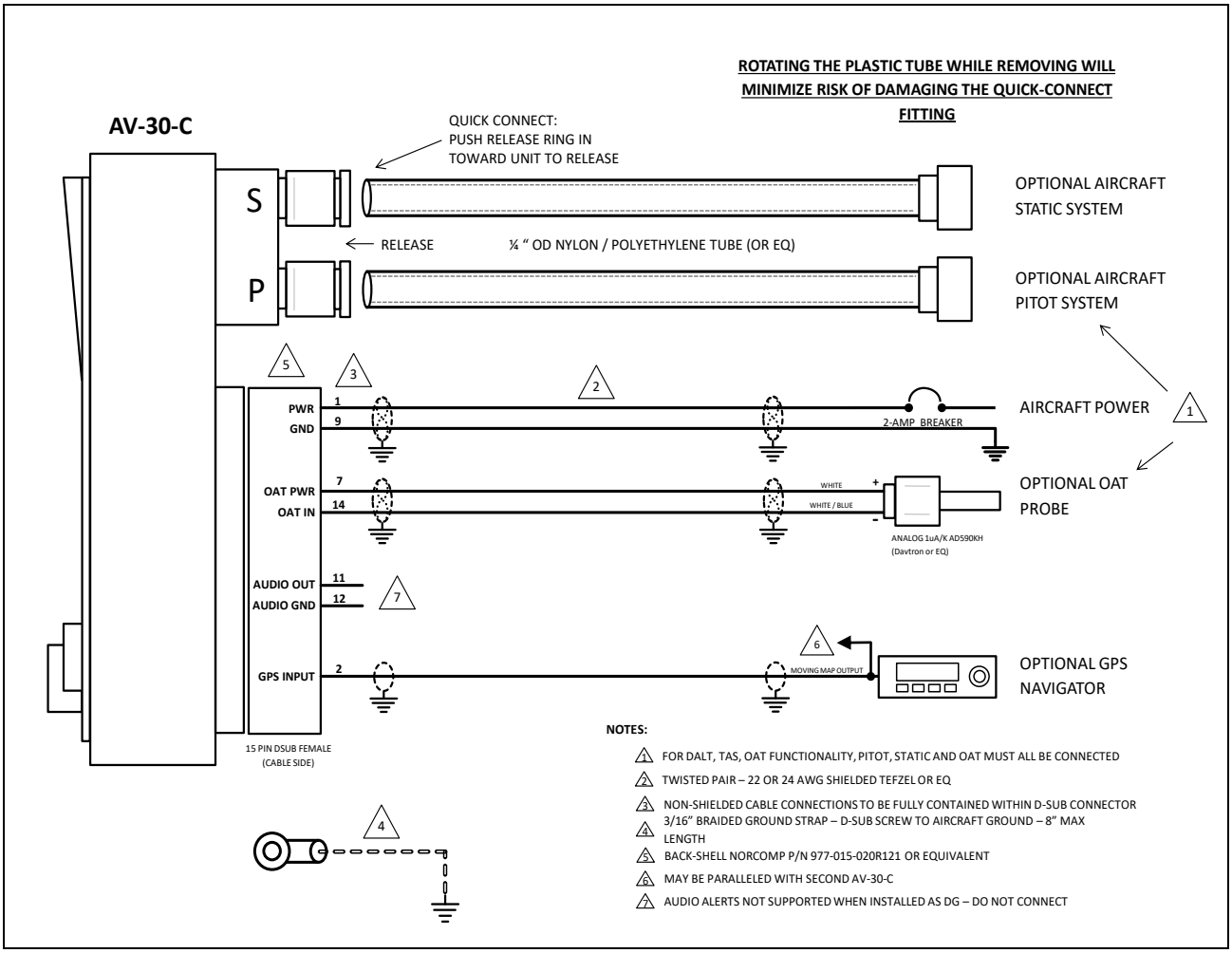

Figure 8 - Wiring Diagram – DG Position Installation

9.8 Bonding Requirements

The following figure shows the grounding requirements for the electrical connections. The two D-Sub screws are to be utilized for shield and ground strap connections. The supplied ring terminal connectors are sized for these screws. The ground braid strap is to be less than 8 inches in overall length and at least 3/16 width. Alpha Wire part number 1230 SV001 or equivalent.

Figure 9 - Ground Braid Strap – 8" or Less in Length

The exposed (non-shielded) portions of the interface cables AND the ground drains are to remain less than 2.5 inches.

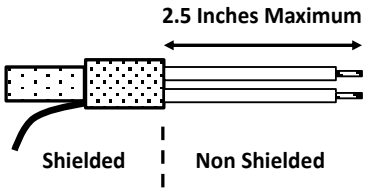

The bond between the unit (measured at the D-sub screws) to the aircraft frame must be 2.5 milli-Ohms or less

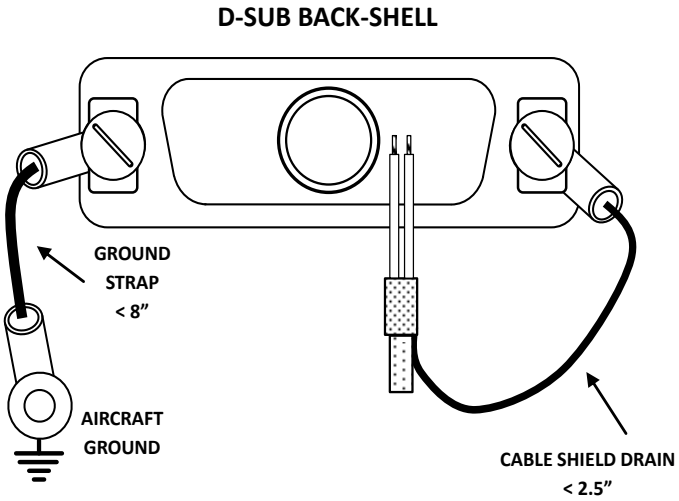

Figure 10 –Cable Shields and Ground Strap

9.9 Unit Pinout

Pin	Function	Type	Comment
1	Power	Power	+12 to +28 VDC
2	GPS Navigator	Input	GPS RS-232
3	Spare Serial	Output	Reserved - Do Not Connect
4	Spare Serial	Input	Reserved - Do Not Connect
5	Spare Serial	Output	Reserved - Do Not Connect
6	Spare Serial	Input	Reserved - Do Not Connect
7	OAT Supply	Output	White Probe Wire
8	Mfg Serial	Input	Reserved - Do Not Connect
9	Ground	Power	Aircraft Ground
10	Aux Power Ret	Power	Reserved - Do Not Connect
11	Audio H	Output	Audio Alerts
12	Audio L	Output	Audio Panel Ground
13	Aux Power Out	Power	Reserved - Do Not Connect
14	OAT Return	Input	White / Blue Probe Wire
15	Mfg Serial	Output	Reserved - DNC

Table 6 – Connector Pinout

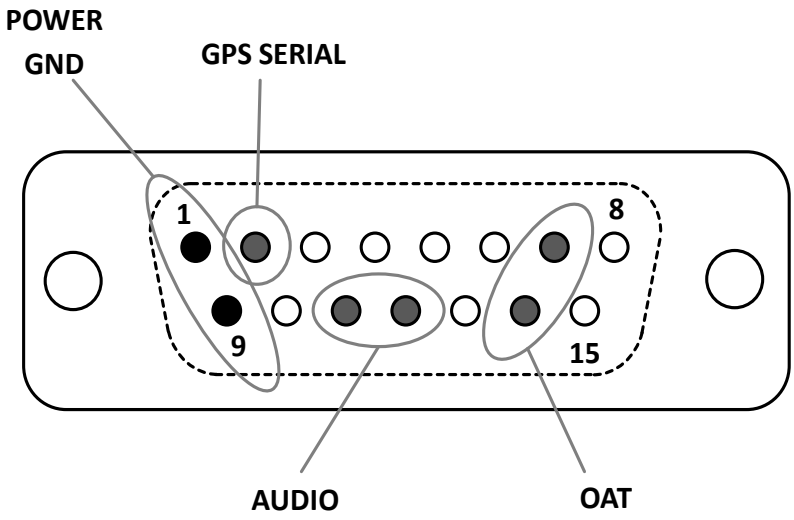

Figure 11 – Unit Connections – DB-15, Male (Rear Unit View

10 Setup & Configuration

10.1 Startup and Common Controls

When powered on, the initial splash screen presents the company logo, unit model number, and the currently installed software version.

Figure 12 – Splash Screen

Operation in both AI and DG modes share common user interface controls as follows:

Figure 13 - Common User Interface Components

10.2 Available Menus

Setup and configuration menus are divided into three categories as follows:

- **Edit Fields Menu** **(Pilot accessible)**
- **Setup Menu** **(Pilot Accessible)**
- **Install Menu** **(Non-Pilot Accessible)**

The Edit Fields Menu allows the pilot to configure the display to show the various supplemental parameters in the desired locations. Details of this are covered in the associated pilots guide and not addressed here.

The Setup Menu allows the pilot to set various configurations and alerting limits as desired for the type of operations being performed.

The installer may wish to pre-configure some or all of these settings for the pilot, but the default settings are acceptable.

☛ The Install Menu is for settings that are not normally required to be adjusted during flight. The installer must review and set these according to the installation configuration.

10.3 Install Menu Activation

To access the Install Menu, ensure the unit is turned off. Press and hold the main control knob in while power is applied.

Figure 14 – Installation Menu Access

Keep the knob pressed until the startup logo has cleared. The Install Menu will now be enabled for access.

Press the Menu button until the INSTALL menu is shown:

Figure 15 – Installation Menu Access

Rotating the knob left and right will access the various parameters that may be configured. Pressing the knob when the desired field is shown will allow the associated setting to be adjusted. After adjustment,

pressing the knob again will disable the editing mode but the Install Menu will remain active.

Pressing DONE will exit the Setup Menu.

Figure 16 - Setup Done / Exit Option

10.4 Install Menu Settings

The Install Menu options and settings must be configured during the installation procedure:

Setting	Description	Options or Range
Unit Function	Unit Functionality	Set to default mode: AI or DG
Function Lock	Functionality Locked	If locked, pilot may not toggle function with knob press
Pitch Trim	Pitch Trim	Trim as needed: ±20 Degrees
Roll Trim	Roll Trim	Trim as needed: ±5 Degrees
Slip Trim	Slip Trim	Trim as needed: ±5 Degrees
OAT Trim	OAT Probe Trim	Trim as needed: ±200 (Unitless)
IAS Trim	IAS Trim	Trim as needed: ±50 (KTS or MPH)
ALT Trim	Baro Altitude Trim	Trim as needed: ±500 Feet
IAS Units	IAS Display Units	Set to match airspeed: KTS, MPH
VSpeed Limits	Vso,Vs1,Vfe,Vno,Vne	Set to match limits: 40 to 300 kts
Baro Units	Baro Setting Units	Set to match altimeter: HG, MB
Temp Units	OAT Units	Set as desired: C, F
GPS Nav Source	Serial Input	Se to match GPS type: NONE, AV1 9600, NMEA1 4800, NMEA1 9600, BEACON X
Serial 2	Aux Serial Input	Set to NONE
Demo Mode	Demo Mode	Set to DISABLED
Software Version	Software Version	For Reference
Software Checksum	Software Checksum	For Reference

Table 7 – Install Menu Options

10.5 Mandatory Settings

The following settings are mandatory for each installation:

10.5.1 Unit Function

Set to AI if installation is replacing an existing Attitude Indicator.

Set to DG if installation is replacing and existing Direction Indicator.

Set to either when installation is as a non-required instrument. In this mode, this setting is the initial default operating mode if the function lock below is not set to locked. Pilot may toggle mode.

10.5.2 Function Lock

Enable function lock for primary AI and DG installations. This prevents the pilot from toggling the operating mode.

Installation as a non-required instrument may be locked or not locked, based on owner preferences. Pressing and holding the knob when functionality is not locked will toggle between AI and DG modes.

10.5.3 Trims

Set Pitch, Roll and Slip Trim to accommodate any mounting errors.

Set IAS and Altitude Trims to match existing instrumentation as needed.

Trim the OAT values to match that of a secondary temperature source such as ATIS. While trimming, the current value is displayed to one tenth of a degree to aid in accurate adjustment. Proper trimming is critical to ensure accuracy of displayed TAS and DALT values.

10.5.4 V-Speeds

Set each of the V-Speeds to the values that correspond to the installation aircraft.

10.5.5 Display Units

Set the IAS units to match that of the existing airspeed indicator.

Set the Baro units to match that of the existing altimeter.

Set OAT units to owner / pilot preference.

10.5.6 Serial Inputs

Set GPS Nav Source to the corresponding GPS navigator input type. Most handhelds are NMEA outputs while most panel mounted navigators are Aviation format. If no GPS is connected, set to NONE.

Set Serial 2 to NONE.

10.5.7 Demo Mode

Set Demo Mode to DISABLED

10.6 System Checkout

10.6.1 Alignment

During initial startup, the ALIGN flag should be presented and flash. This indicates internal sensor stabilization is occurring.

This should extinguish within 3 minutes, at which point valid attitude or direction indication is displayed.

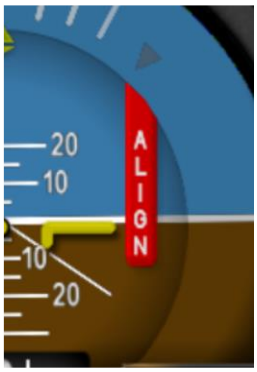

Figure 17 - Align Flag

If this is not observed, reference the trouble shooting section of this document for additional information.

10.6.2 OAT Interface

If an OAT probe is connected, utilize the display customization guidance provided in the Pilots Guide to configure the display to show OAT in at least one textual display field.

Figure 18 – OAT Indication

Note that OAT calibration is performed in the Setup procedures. This step only ensures that the OAT probe is detected properly.

10.6.3 GPS Navigator Interface

If a GPS Navigator is connected, utilize the display customization guidance provided in the Pilots Guide to configure the display to show GPS navigational data in at least one textual display field.

The image below shows a typical configuration that the pilot may setup.

Figure 19 – OAT Indication

On the GPS navigator, set a destination waypoint and initiate a direct-to sequence. Note that not all navigators will output serial data until a waypoint has been selected and navigation initiated.

10.6.4 EMC Checkout

An EMC check should be performed after the AV-30-C installation is complete. The EMC check verifies that the newly installed equipment is not producing interference to other avionics and that the existing avionics are not producing interference to the AV-30-C. The testing assumes the AV-30-C operational check has been completed and that the installed avionics to be tested are all in working condition.

1. Power on all avionics except the AV-30-C.
2. Verify all existing avionics are functioning properly. Some systems may require startup messages to be acknowledged/cleared to verify proper function.
3. After confirming all existing avionics are functioning properly, power off all existing equipment.
4. Power on the AV-30-C and perform the following tests as they apply to the existing aircraft equipment.
5. Observe load shedding procedures as appropriate for the aircraft during testing to ensure adequate power to complete the testing while maintaining enough reserve to support pre-flight and engine start.

<u>VHF COM RADIOS</u>

Verify AV-30-C operates without interference from the VHF COM operation.

1. Power on the VHF COM radio.
2. Transmit on a low, medium and high frequency. Unused frequencies are recommended for this test. Example frequencies: 118.0, 126.0, 135.0.
3. During each transmission verify the AV-30-C continues to operate properly.

Verify each radio operates without interference from the AV-30-C.

1. Monitor a local frequency and verify there are no unintended squelch breaks or other tones that would interfere with communications.

2. Monitor a remote (distant) frequency and verify there are no unintended squelch breaks or other tones that would interfere with communications.

3. Monitor an unused frequency and verify there are no unintended squelch breaks or other tones that would interfere with communications.

VHF NAV RADIOS

Verify VHF NAV operates without interference from the AV-30-C.

1. Power on the VHF NAV radio.

2. Monitor a local, remote, and unused frequency.

3. Verify there are no misleading navigation indications during the monitoring of each frequency.

4. Verify audible station ID and that the station is clear of audio interference that would prevent identification.

ADDITIONAL AVIONICS

Additional Avionics should be tested according to the manufacturer EMC/EMI test procedures. This testing assumes the existing equipment is functional and operating correctly at time of testing. The following summarizes a typical EMC test.

1. Operate the AV-30-C.

2. Operate the existing installed avionics according to manufacturer instructions. If capable, utilize the device transmit and receive functions through a range of values.

3. Verify no errors, warnings, or unexpected operation is observed on the AV-30-C during operation of the installed avionics.

4. Verify no errors, warnings, or unexpected operation is observed on the installed avionics during operation of the AV-30-C.

11 Troubleshooting

The following steps are to aid in identifying installation or unit performance related issues:

Issue	Possible Resolution
Power Related Issues	
Unit does not power-on	Check associated breakers.
	Ensure aircraft battery is greater than 10VDC.
	Check wiring and pinouts.
Unit will not shut-off, even if power is removed	Ensure no pitot static blockage or line kinks are present (locking pressure and airspeed indication over 40 KTS).
Stabilization Related Issues	
Unit will not stabilize and aligning flag remains on	Return to factory for service if unit does not align within 3 minutes of power-on.
Battery Related Issues	
Battery indication shows fail	Contact factory.
Trim Related Issues	
Roll, Pitch or Slip show small but constant error	Set associated trim adjustment in Installation Menus.
Airspeed or Altitude shows small but constant error	Set associated trim adjustment in Installation Menus.
Interface Related Issues	
GPS information is expected but does not show up in data overlays.	Check GPS input is configured to match the connected GPS serial data type and speed.
	Set a direction indication to GPS TRK. If “No Data” is shown, check interface cables and pinouts. If “No GPS” is shown ensure protocols and speeds are set correctly.
Alerts	
Audio alerts are not being heard over the audio system	Check wiring and ensure alerts are enabled in the pilots Setup Menu.
	Ensure un-switched input is available on the audio panel.
	Verify volume setting is sufficiently high in the pilots Setup Menus.
Nuisance alerts are being generated	Ensure alerting limits are configured as desired in the Setup Menus.
	Disable any un-desired alerting features in the Setup Menus.

Table 8 – Trouble Shooting

12 Instructions for Continued Maintenance & Operation

See *UAV-1004045-001, AV-30-C, Instructions for Continued Airworthiness* (ICA) for replacement, inspection requirements and procedures.

The ICA addresses the following aspects of continued airworthiness:

- Visual Inspection Procedure
- Altimeter Test and Calibration
- Battery Test and Replacement Procedure

13 Aircraft Flight Manual Supplements

See *UAV-1004044-001, AV-30-C, Flight Manual Supplement* for normal, emergency and limitations as required by CFR §23.1581.

14 Serial Interface Specification

GPS serial input is compatible with the “Aviation” and NMEA serial protocols. Aviation protocol is 9600 Baud, No Parity, 8 Data Bits, 1 Stop bit. NMEA is either 4800 or 9600 Baud, No Parity, 8 Data Bits, 1 Stop Bit.

The packets received are as follows:

Parameter Name	Aviation Packet	NMEA Packet
GPS Track	“C” Packet	$GPRMC, Field 8
GPS Ground Speed	“D” Packet	$GPRMC, Field 7
Distance to Waypoint	“E” Packet	$GPRMB, Field 10
Cross Track Error	“G” Packet	$GPRMB, Field 2
Desired Track	“I” Packet	Computed
Waypoint ID	“K” Packet	$GPRMB, Field 5
Bearing to Waypoint	“L” Packet	$GPRMB, Field 11
Magnetic Variation	“Q” Packet	$GPRMC, Field 10
AT Master Flag	“T” Packet, Flag 4	$GPGGA, Field 6
Garmin Master Flag	“S” Packet, Flag 5	N/A

Table 9 - GPS Serial Specification

15 Field Update Capability

The unit software is field updateable and requires an in-line harness and Windows based PC. Contact the factory for additional information.

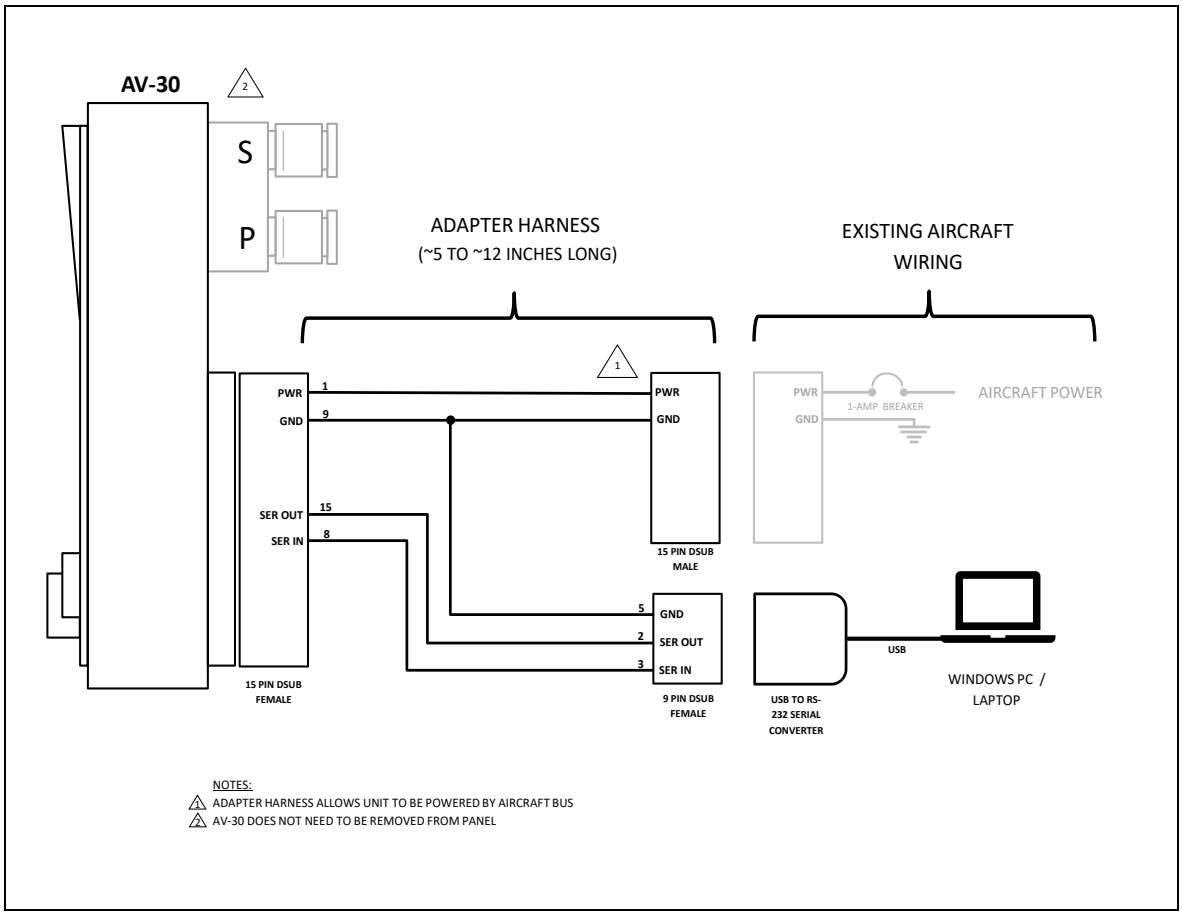

Figure 20 - Field Update Harness